ASSEMBLY INSTRUCTIONS

6135

CAUTION :
- BEFORE ASSEMBLING, READ ALL THE INSTRUCTION.
- ENSURE ALL COMPONENTS ARE PLACE ONTO CARDBOARD AS PROTECTION.
- CLEAN SURFACE WITH A DRY OR DAMP SOFT CLOTH.
- DO NOT USE ABRASIVE CLEANERS, DETERGENT OR CHEMICAL.

HARDWARE :

1	2	3	4	5
x 28 PCS	x 28 PCS	x 28 PCS	x 32 PCS	x 52 PCS

TOOLS REQUIRED :

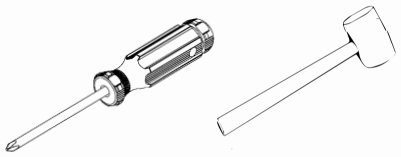

COMPONENTS :

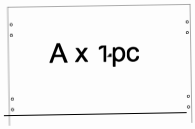

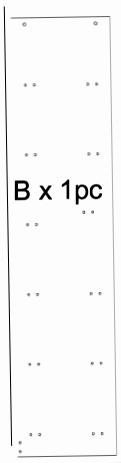

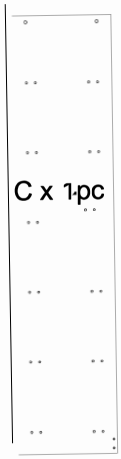

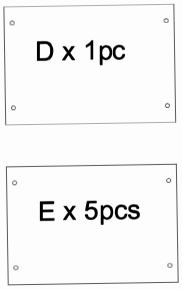

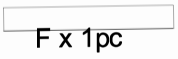

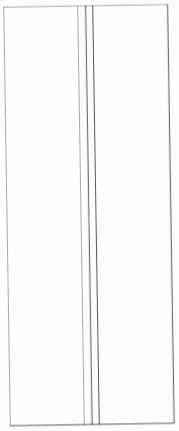

STEP 1

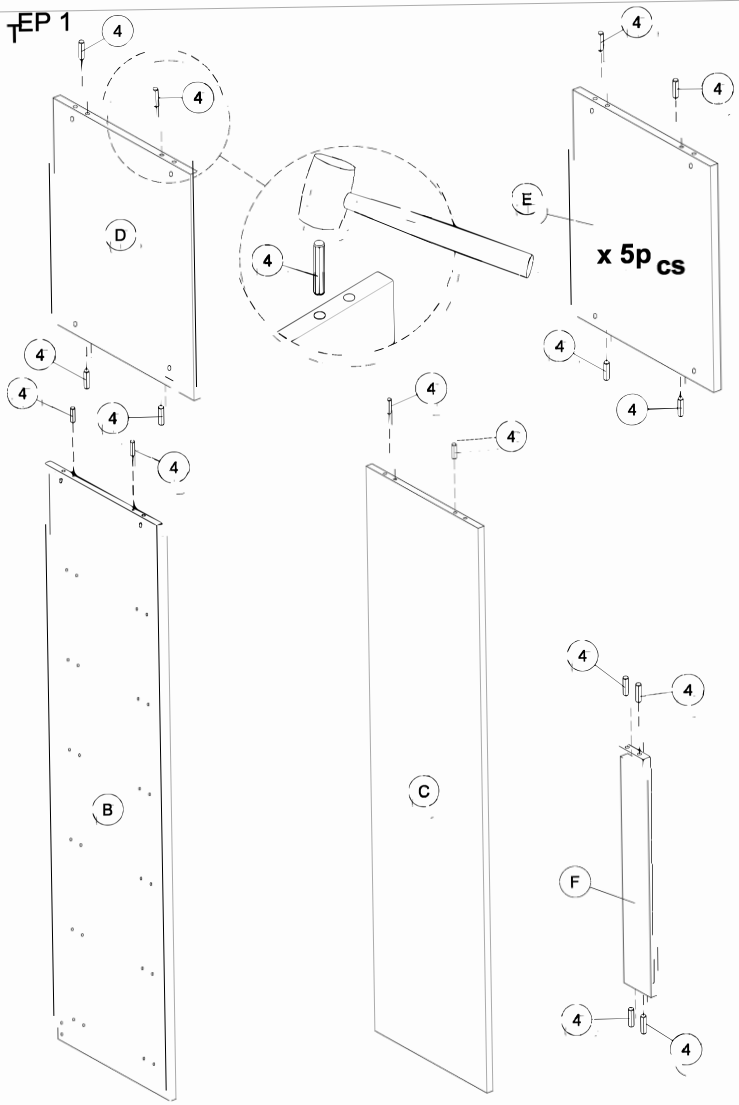

STEP 2

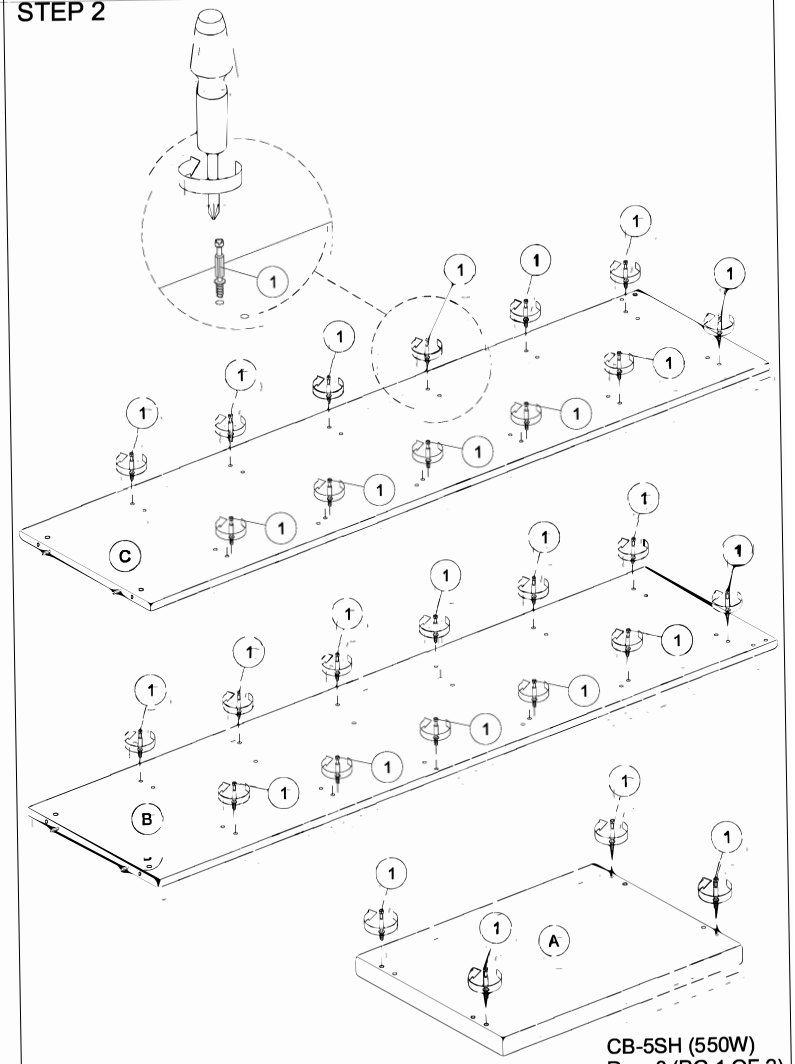

CB-5SH (550W)
Rev. 0 (PG 1 OF 2)

ASSEMBLY INSTRUCTIONS

STEP 3

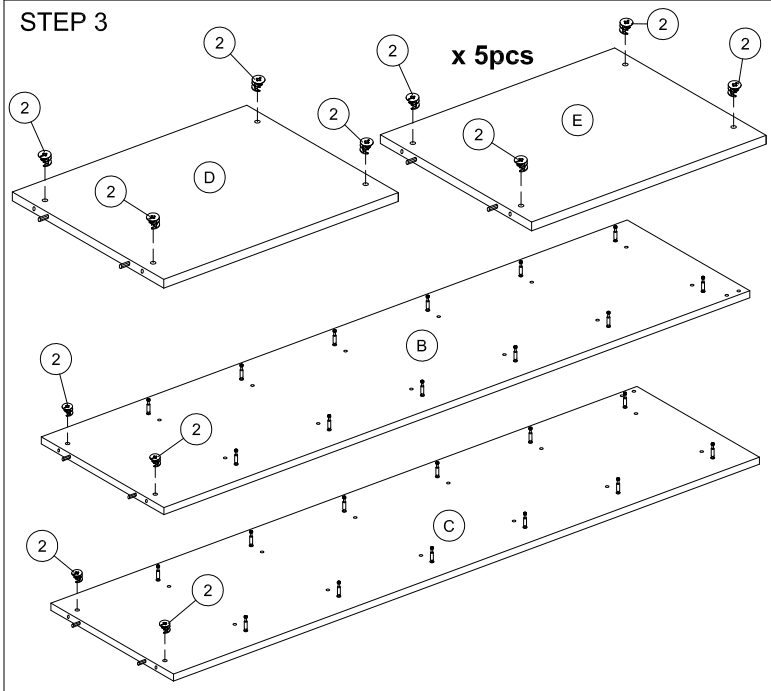

STEP 4

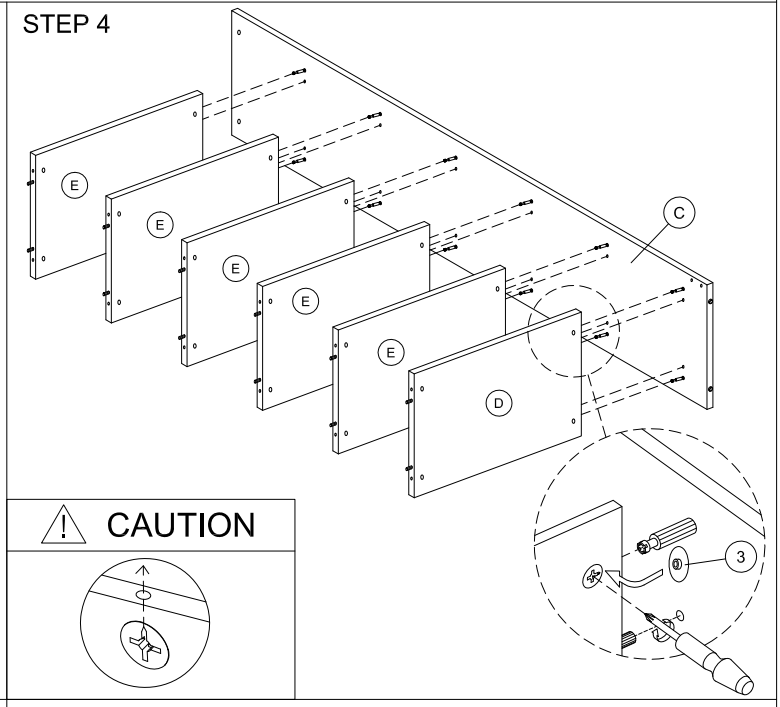

STEP 5

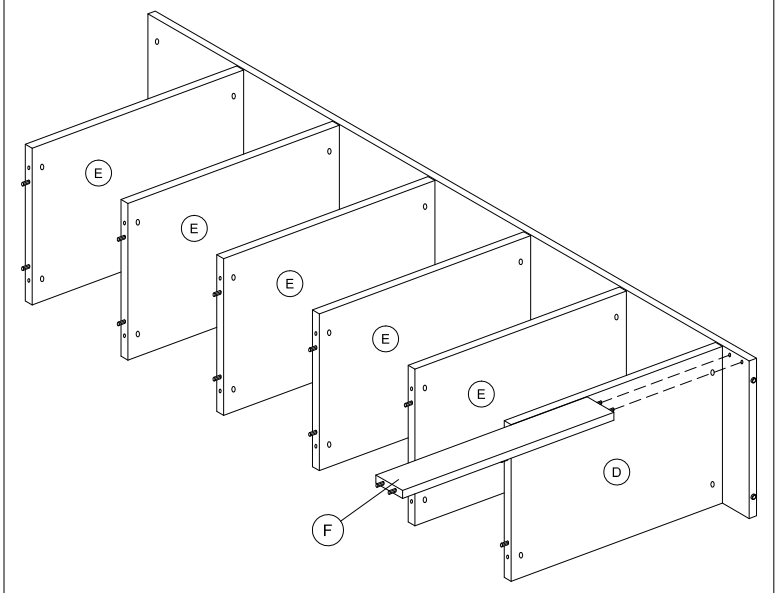

STEP 6

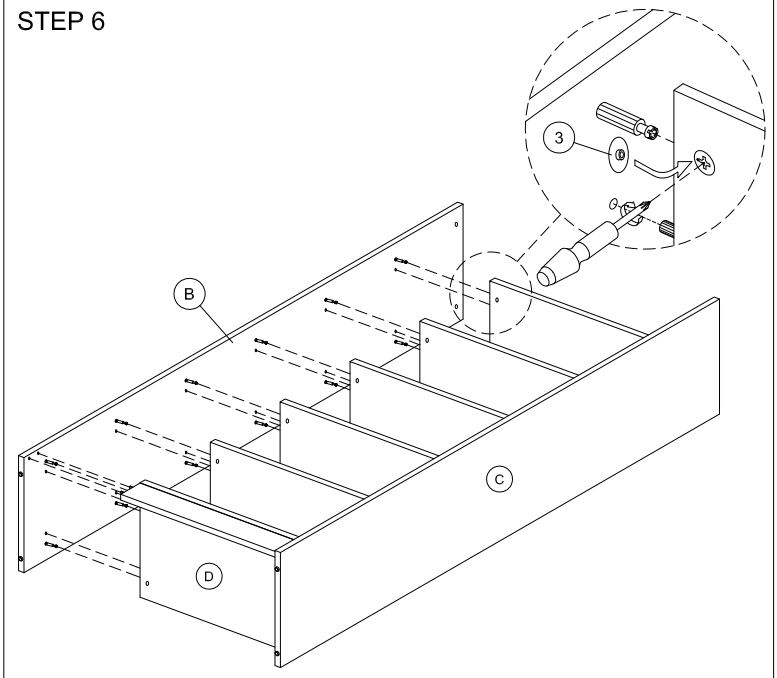

STEP 7

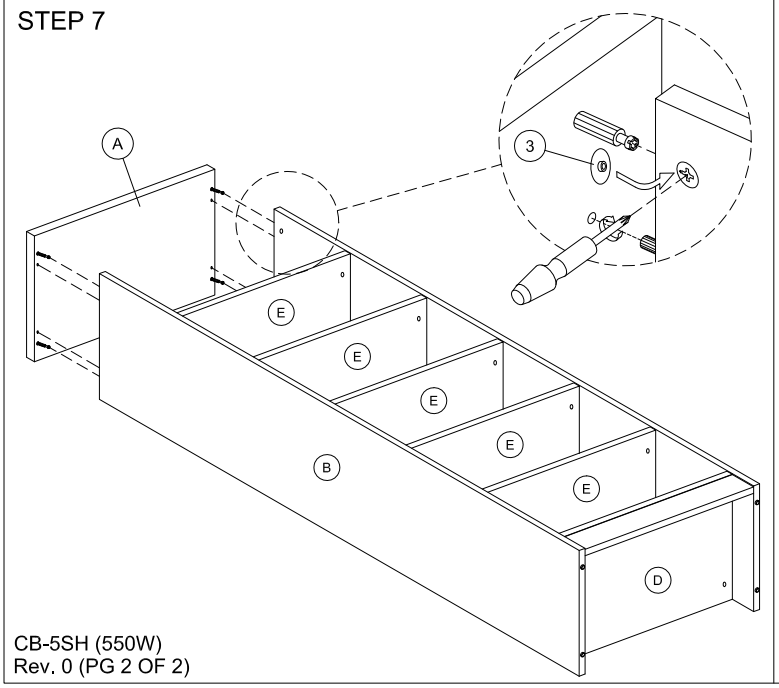

STEP 8

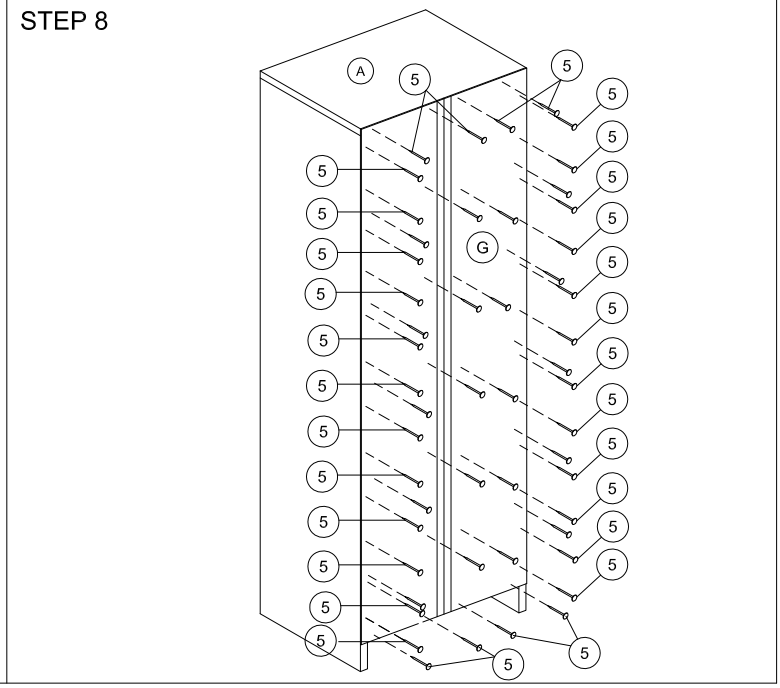

CB-5SH (550W)
Rev. 0 (PG 2 OF 2)